FIN-CLAMP CONSTRUCTION INSTRUCTIONS

STEP-BY-STEP

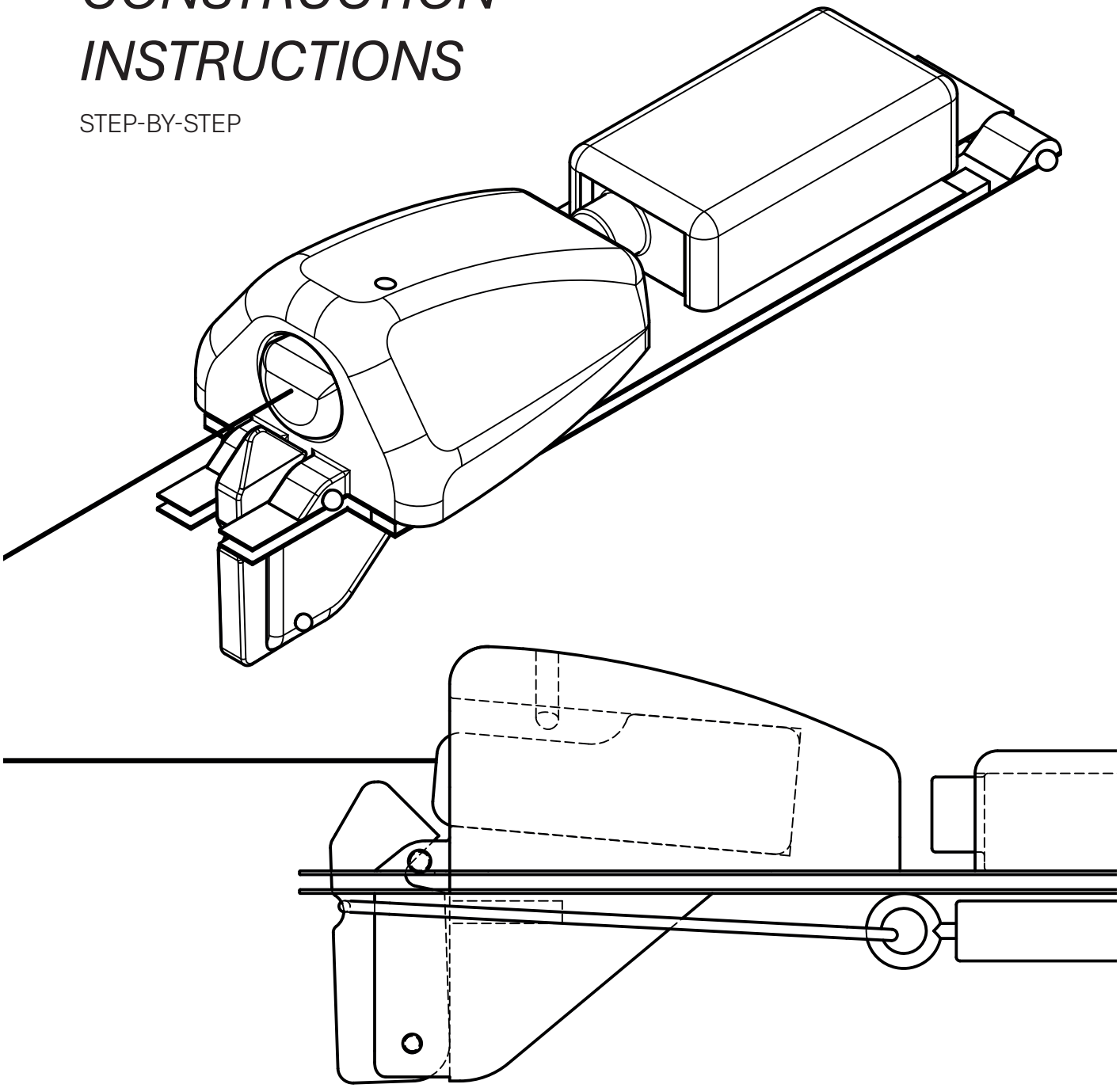

This file provides a **list of materials**, **tools and step-by-step instructions** to produce the fin-clamp described in the article *A New Reproducible, Minimally Invasive Fin-Clamp Enabling Biologging and Animal-Borne Video Studies of Juvenile Sharks*. All specific dimensions and weights are for the miniaturized version of the tag with the described sensors. General production steps and testing instructions apply to manufacture the tag for different payloads and fin sizes but measurements might differ.

Correspoonding author
C. Robert Priester | robert.priester@posteo.de

Contents

Overview 3

Material 4

Tools 4

Step-by-step instructions 6

Base plates 6

1) Cut fiberglass bases 6

2) Make hinge 6

3) Cut hinge 8

4) Cut release flaps 9

5) Inside coating 10

Components 11

1) Sensor foam 11

2) Release mechanism latch 12

3) Release mechanism 13

4) Release pin attachment points 14

5) GTR attachment point 15

6) Glue first components 15

7) Clean glued clamp 16

8) Release latch assembly and fine-tuning 16

9) Buoyancy tests and fine-tuning 17

10) VHF foam 18

11) Smooth and paint 21

Full Assembly and Testing 21

1) Full assembly (for field tests or deployments) 21

2) Testing 22

Customization Considerations: 22

Overview

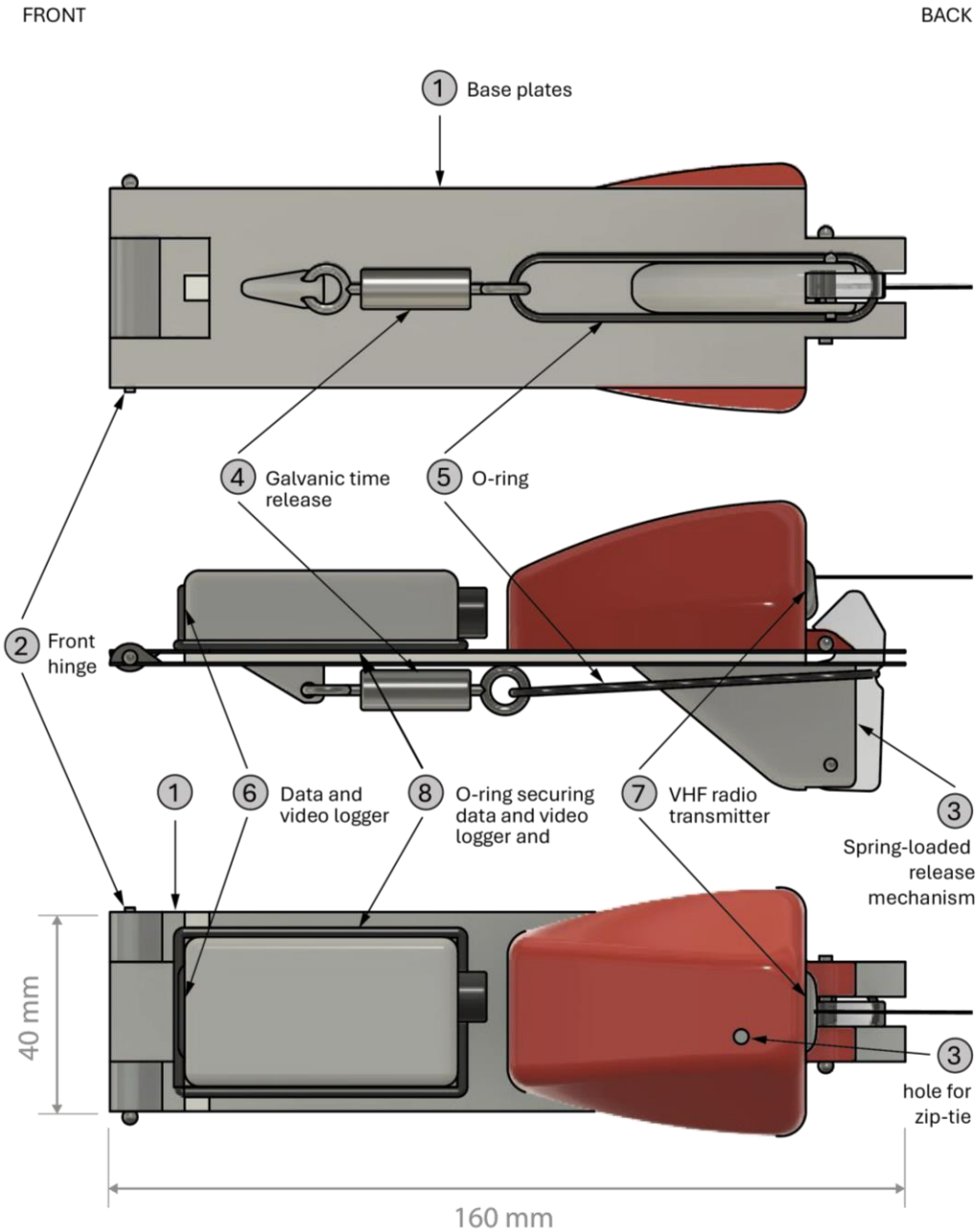
FRONT
BACK
1 Base plates
4 Galvanic time release
5 O-ring
2 Front hinge
1
6 Data and video logger
8 O-ring securing data and video logger and
7 VHF radio transmitter
3 Spring-loaded release mechanism
40 mm
3 hole for zip-tie
160 mm

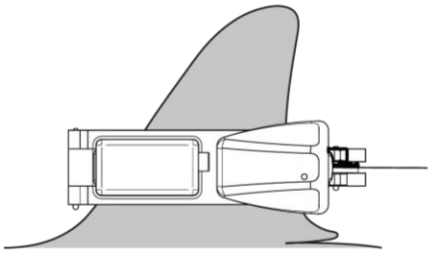

Material

Description	Quantity	Dimensions	Comments
Carbon fiber sheet	1	200 x 100 x 5 mm	Determines flex of clamp – thicker for larger fins and clamps
Ballpoint pen	2		Inside tube for hinge hole
Ballpoint pen spring	1		Or alternatively a stainless-steel spring of similar size
Long stainless-steel rivet	1	>45 mm long	For hinge
Short stainless-steel rivets	2	2 mm diameter	Different diameter or aluminum alloy also possible
Marine grade epoxy + hardener	100 g		
Fiberglass shreds/ Fiberglass mat	10 g		If shreds are not available but a small fiberglass mat and cut it into ca. 1cm short strands
HCP foam	1	Min. 125 x 50 x 35 mm	
Syntactic foam	1	Min. 50 x 50 x 10 mm	
Sand	20 g		Grain size determines coat coarseness
Cyanoacrylate glue	10 g		
Rubbing alcohol	100 ml		
Acrylic spray paint	2		1 neutral color (grey), 1 signal color
Clear coat spray	1		
Reflective tape	<1 m		

Tools

- Saw (fine toothed metal/composite saw best)
- Sandpaper (60, 100, 150 grit)
- Narrow flat metal file
- Pliers
- Masking tape
- Mixing cup
- Mixing stick
- Brush
- Carpet knife
- Paper wipes (best lint-free)

- Tape measure
- Calipers
- Power drill
- Metal drill bits (2, 2.5, 3, 17 mm)

Optional

- Dremel or similar precision drill
- Oven
- Round file
- Crimping pliers
- Angle grinder
- Precision scale

Step-by-step instructions

Base plates

1) Cut fiberglass bases

a) Cut two rectangular bases 40 x 165 mm from sheet
   (i) (Study species fin size + 40 mm)
b) Mark front and back, and sensor and release side
c) Mark longitudinal middle line

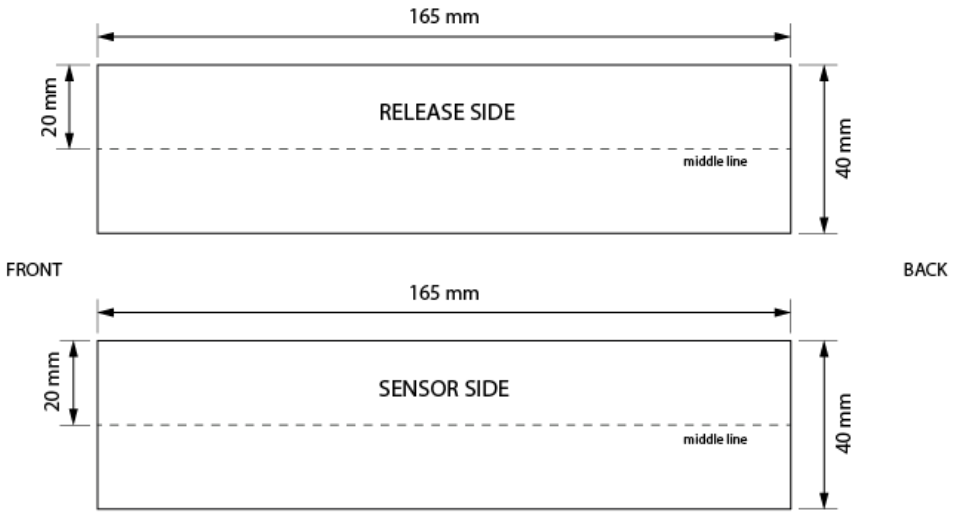

Figure 1

2) Make hinge

a) Prepare front surface (front 20 mm of both bases)
   i) Sand with 100 grit
   ii) Clean with rubbing alcohol and wipes
b) Mark line 10 mm from front edge (see Figure 2)
c) Place ballpoint pen inner tube on line and fix in place using tape outside of the base area
d) Cover with fiber-reinforced epoxy resin (remove bubbles). Tube must be completely covered with >2 mm layer
e) Cure in oven
f) If necessary, sand, clean and repeat steps 2d) and 2e), until achieving even required thickness

g) Remove tube (slowly twist and pull)

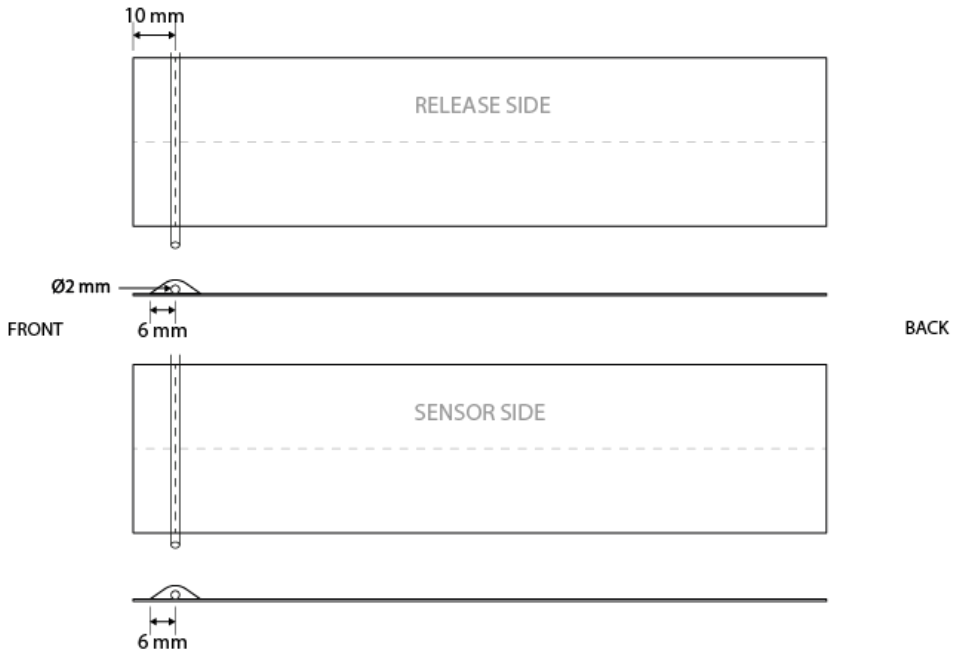

Figure 2

h) Sand excess resin until smooth and flush with sides of the base
i) Cut 5 mm at the front (see Figure 3)
j) Test fit of long rivet – drill hole wider if necessary

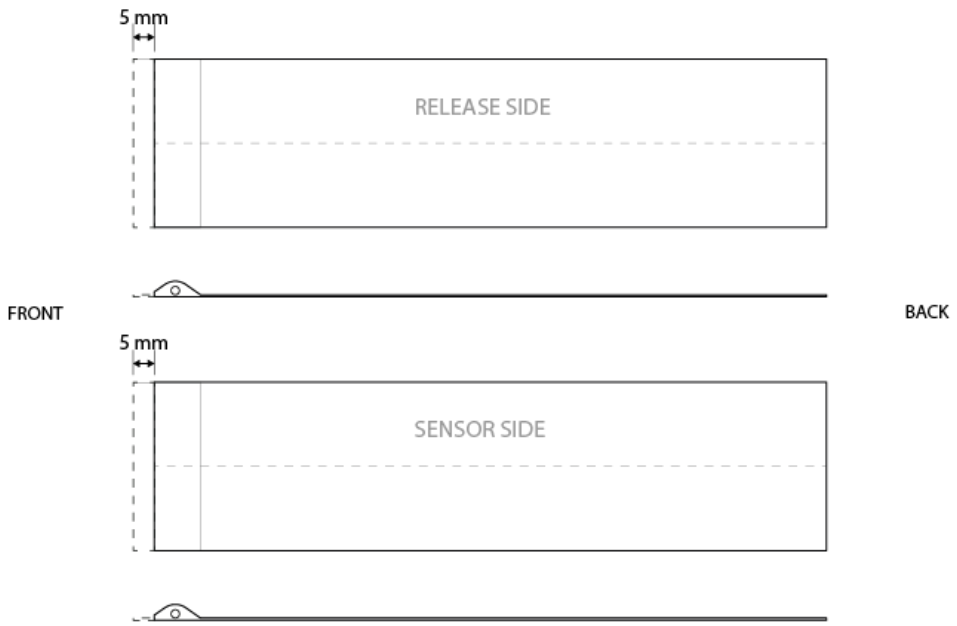

Figure 3

3) Cut hinge

a) On Sensor Base, remove 20 x 10 mm rectangles on both sides of the cured hinge (see Figure 4 top)

b) On the Release Base, remove a 20 x 20 mm square in the middle of the cured hinge (see Figure 5 bottom)

c) Test that both sheets fit into each other and hinge moves freely

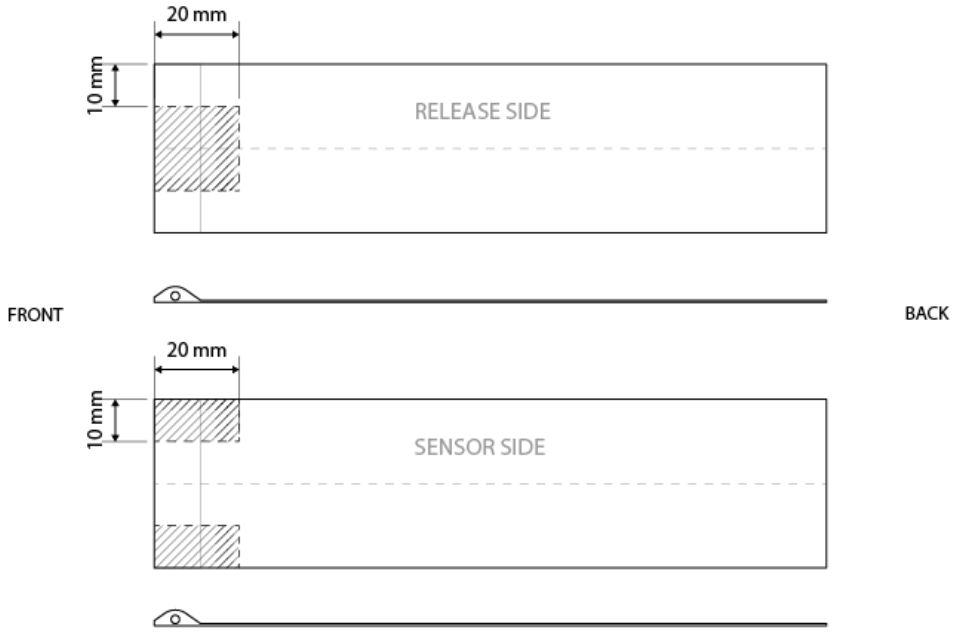

Figure 4

4) Cut release flaps

a) Remove a 20 x 10 mm rectangle on both sides of the back end of the Release and Sensor Base (see Figure 5)

b) Remove a 20 x 6 mm rectangle centered on the middle on the back of the Release and Sensor Base

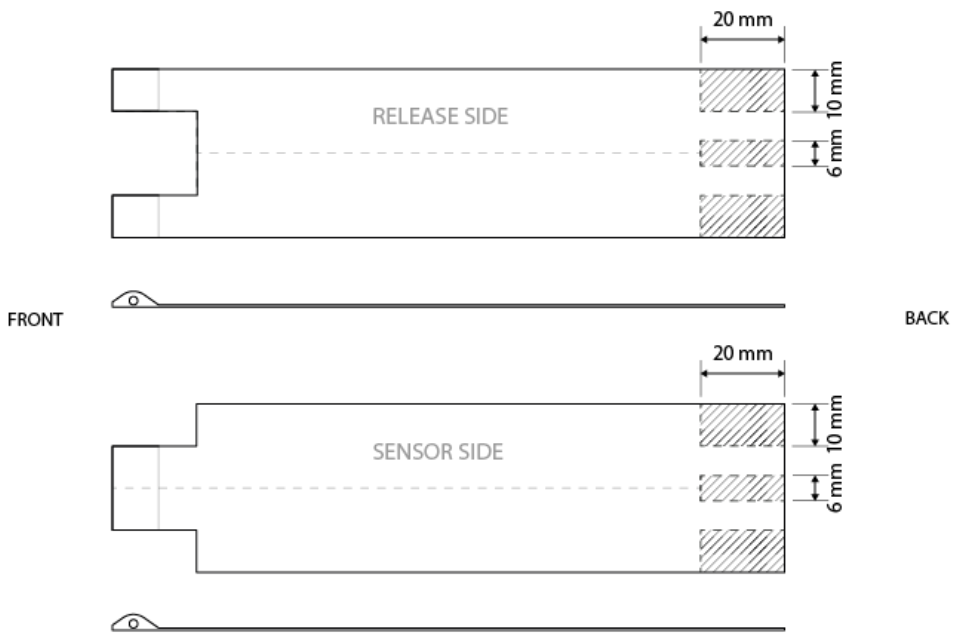

Figure 5

5) Inside coating

a) Cut 3 strips of HCP foam (125 x 5 x 2 mm)
b) Prepare the inside surface of both Bases
   i) Sand with 100 grit
   ii) Clean with rubbing alcohol and wipes
c) Cover the inside surfaces of both Bases with thin layer of resin (brush on)
d) Glue two strips flush with outside edge of the inside release sheet (see Figure 6 top)
e) Glue one strip to along middle line of inside sensor sheet (see Figure 6 bottom)
f) Sprinkle sand on remaining exposed resin before cured
g) Place in oven (50 °C) until fully cured

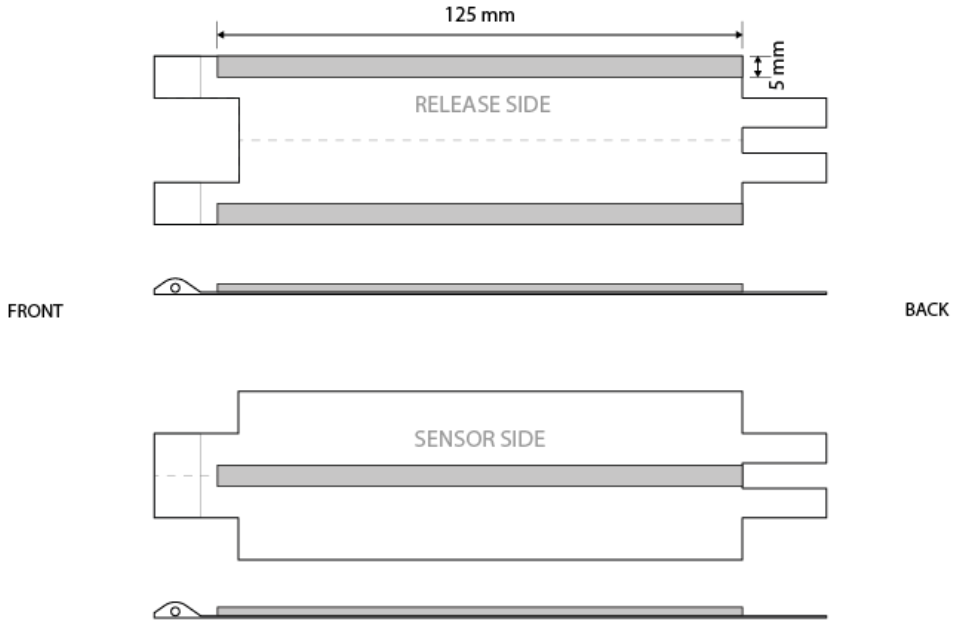

Figure 6

Components

1) Sensor foam

(DVL400M028—VD3GT, Little Leonardo specific specifications)

a) Cover sensor or dummy in one to two wraps of packaging tape (protecting sensor during glueing process)
b) Cut two side walls of pressure rated HCP foam (57 x 13 x 4 mm)
c) Cut one top side of pressure rated HCP foam (57 x 29 x 3 mm)

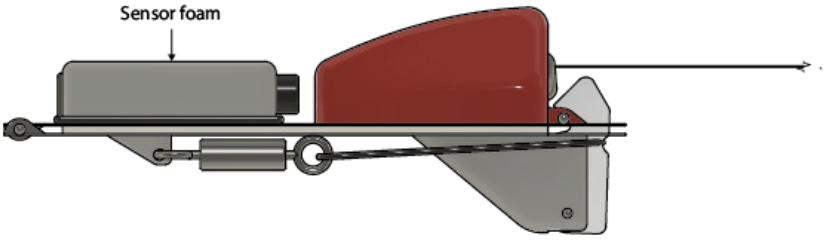

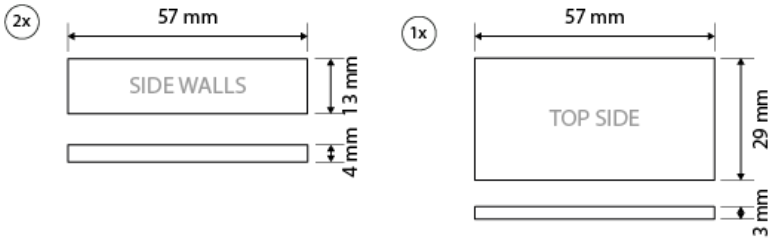

d) Place sensor on a flat surface and position sides and top to check confirm fit
e) If necessary, sand any walls to make sure the fit is appropriate (external overlap can be sanded after gluing)

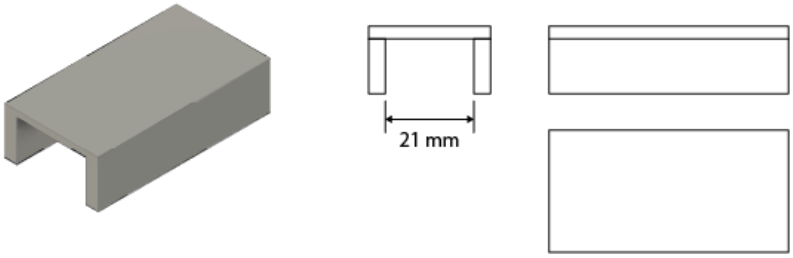

f) Glue walls using Cyanoacrylate glue (to assure positioning it can be glued with tape-covered sensor in place)
g) After glue has set remove sensor and round off edges and protruding corners
h) Optional: cover sensor foam in thin layer of epoxy resin

2) Release mechanism latch

a) Cut the release latch from a 5 mm polycarbonate or PVC sheet (40 x 15 mm)
b) Drill 2.5 mm hole as depicted on plan

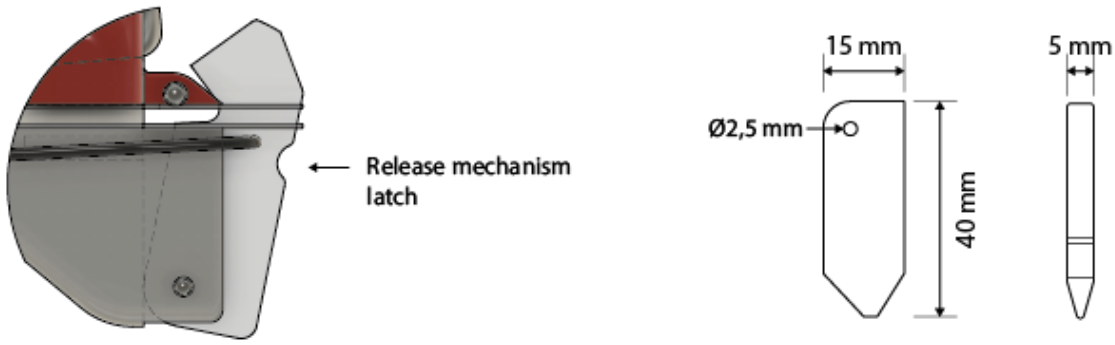

c) File the bottom tip conic
d) File a rounded depression (ca. 2 mm deep) for the O-ring on the back side
e) Round off edges as depicted on plans using a file
f) Sand all edges smooth

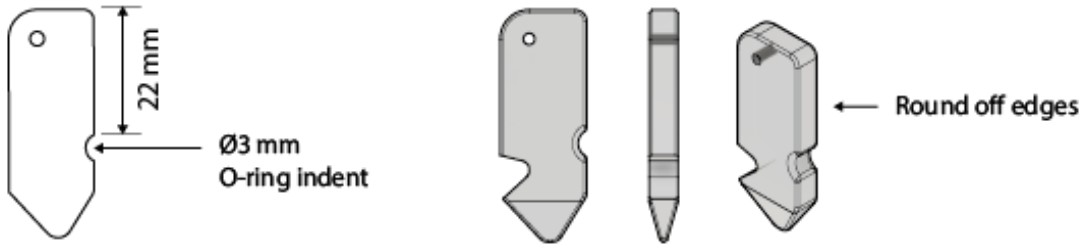

3) Release mechanism

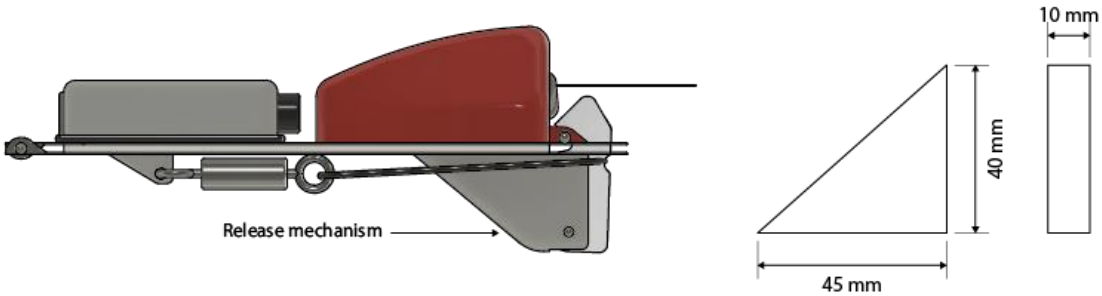

a) Cut a triangle from syntactic foam (bottom side: 45 mm, back side 40 mm, thickness 10 mm)
b) Trim off the top at 25 mm
c) Remove a 10 mm deep 5 mm wide cuboid along the center line of the back of the back side (saw and file)
d) Check that latch fits smoothly into notch without friction, if too tight – sand/file wider

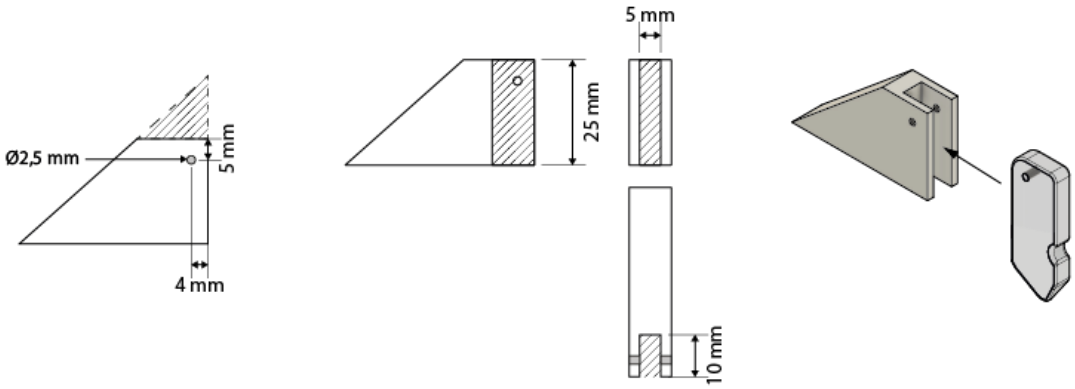

e) On the bottom of the back notch, drill a 15 mm deep hole (diameter 3 mm)
f) Insert ballpoint pen spring (or if available stainless-steel spring)

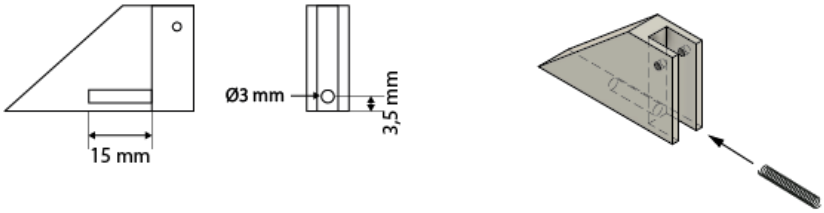

4) Release pin attachment points

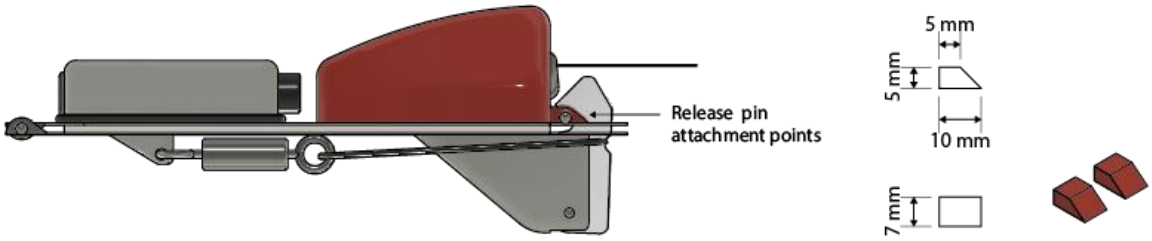

a) Cut two small blocks of HCP foam (10 x 7 x 5 mm) (Glued in place later)

5) GTR attachment point

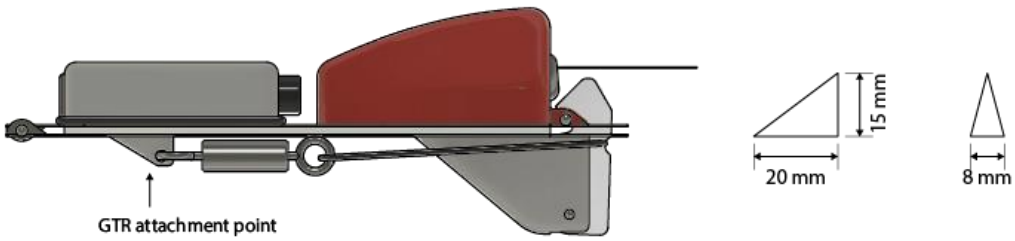

a) Cut a small fin shaped triangle of syntactic foam (20 mm base, 15 mm height, 8 cm width at base)
b) Remove 5 mm from the tip
c) Smooth off edges
d) Drill hole for GTR eyelet screw (3 mm)
e) Check fit of GTR eyelet screw (bend to insert and close)
f) If GTR eyelet screw does not fit, expand hole

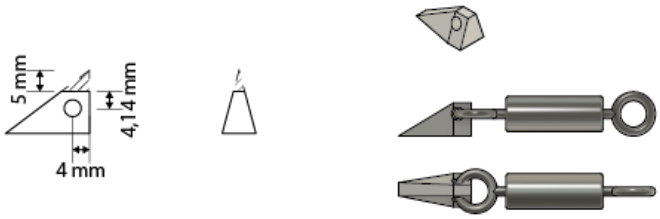

6) Glue first components

(Sensor foam, Release mechanism, Release pin attachment point, GTR attachment point)

a) Prepare outside surface of both bases
   i) Sand with 100 grit
   ii) Clean with rubbing alcohol and wipes
b) Prepare glueing surfaces of components
   i) Sand with 100 grit
   ii) Clean with rubbing alcohol and wipes
c) Cover glueing surfaces of components with resin
d) Place components on the respective Bases and align as shown on plans (especially the release mechanism needs to be aligned well with the middle line and the gap on the Release Base)

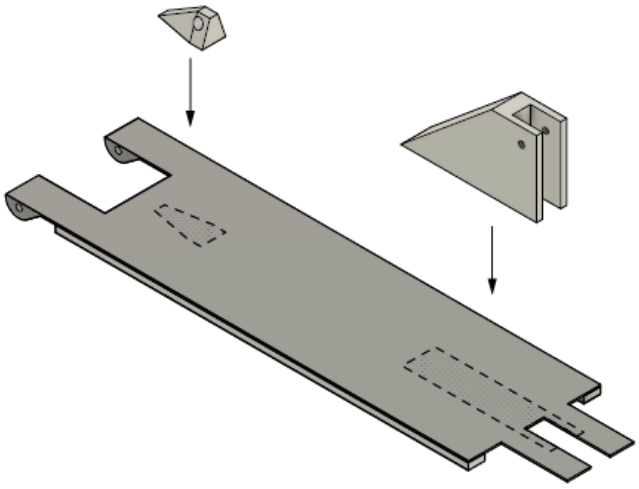

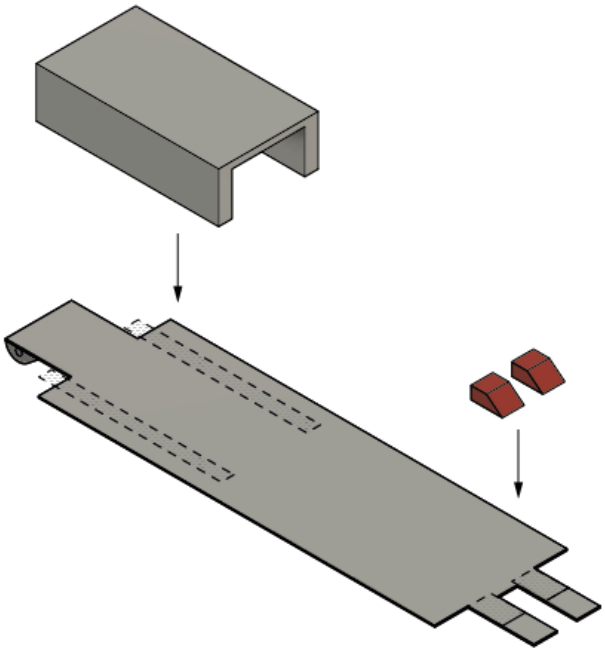

e) Place in oven (50 °C) until cured

7) Clean glued clamp

a) Remove excess resin with a file
b) Drill hole for release pin (3 mm)
c) Insert release pin (glue if loose)
d) Assemble main hinge pin (keep in place with tape)

8) Release latch assembly and fine-tuning

a) Insert rivet through both and cut flush

b) Close both clamp sides and mark position of release pin on release latch
c) File angled notch into release latch (reference as image)

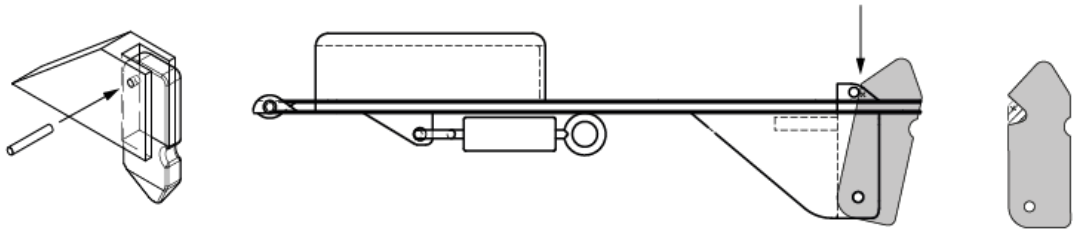

d) Test if latch keeps tag closed with assembled GTR-O-ring but springs open without. It needs to be smooth and work every time. If in doubt file more conic and use tighter O-ring

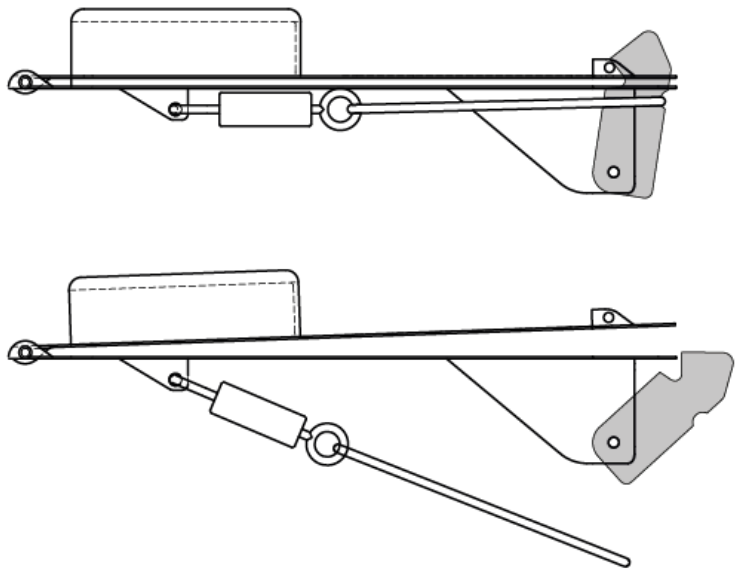

9) Buoyancy tests and fine-tuning

a) Test buoyancy in seawater with sensor and single GTR eyelet screw (without GTR)
b) Assembled open clamp should be slightly negative (especially release side)
c) If adjustments are necessary, sand down following components, focusing on rounded streamline forms:
   i) Sensor foam
   ii) Release mechanism foam
   iii) GTR attachment point
   iv) Inside strips

10) VHF foam

a) Cut HCP foam block (60 x 50 x 35 mm)
b) Mark VHF center point as per plans
c) Drill VHF hole using 17 mm metal drill bit at slight outward angle
d) Check fit of VHF with end protruding ca. 2 mm
    i) If necessary, sand inside to improve fit – ideally VHF can be pushed in easily but does not slide out without pulling

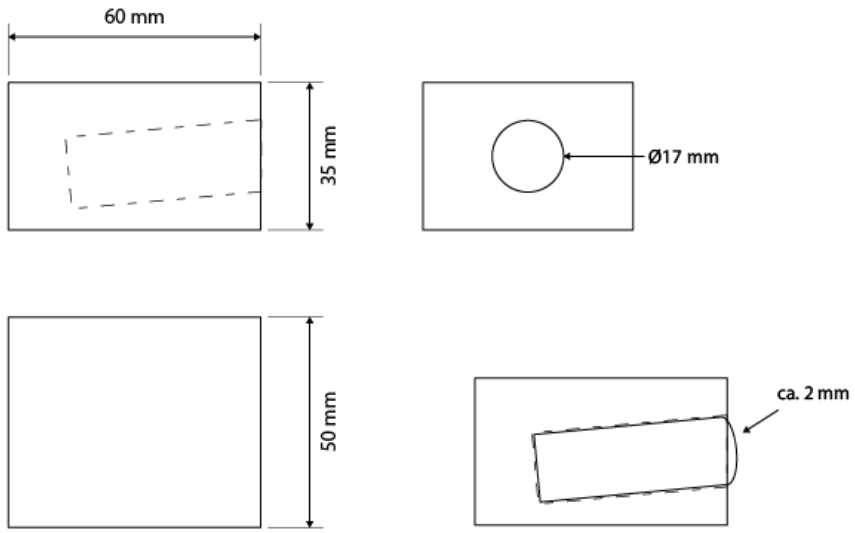

e) Tape to clamp in position with all components installed (GTR, Sensor, VHF) and test buoyancy
f) Reduce volume aiming for a gradual hydrodynamic shape with smooth transition from sensor foam size to larger end

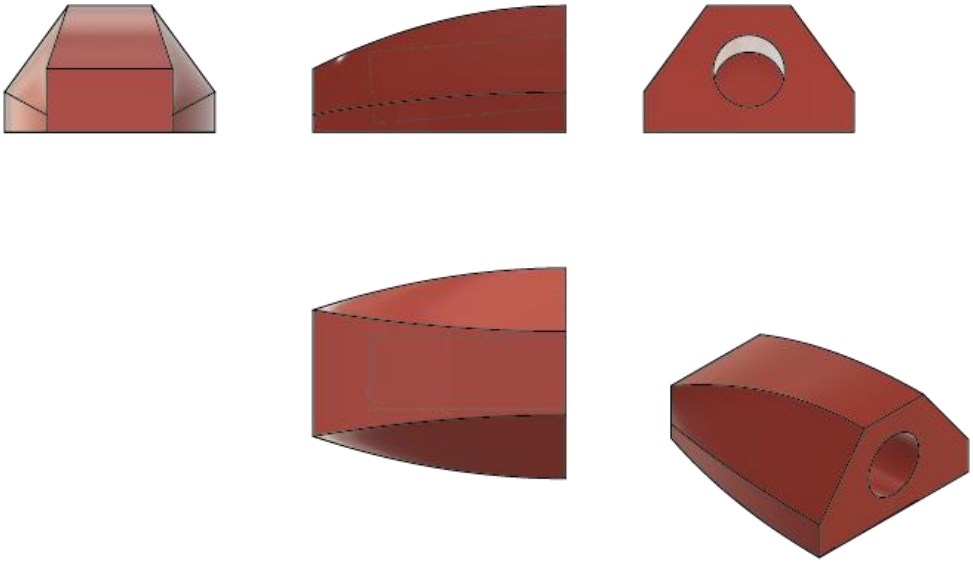

g) Repeat buoyancy test – buoyancy is good when tag floats upright (VHF antenna vertical) and waterline is ca. 10-15 mm below top of VHF float

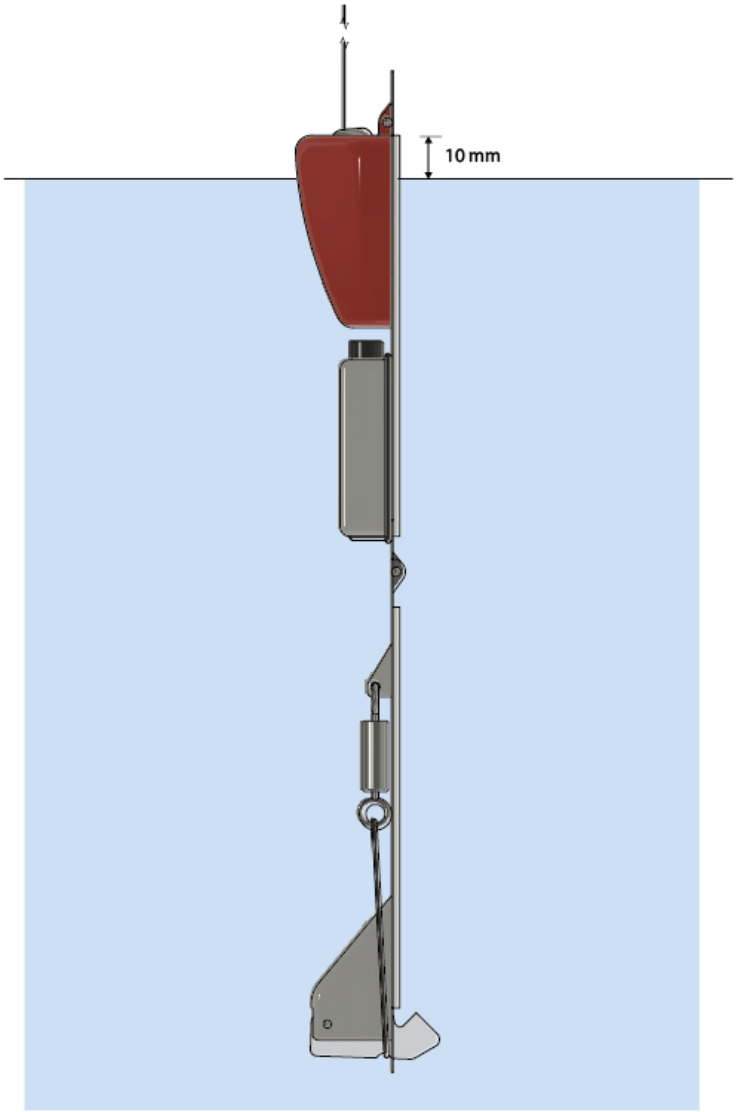

h) If the buoyancy is good but the position not vertical, a small piece of lead or stainless-steel metal (ex. nut) can be glued to the area close to the hinge to correct the vertical position

i) Drill a 3 mm hole on the outside part of the foam to allow the insertion of a thin zip-tie to secure the VHF

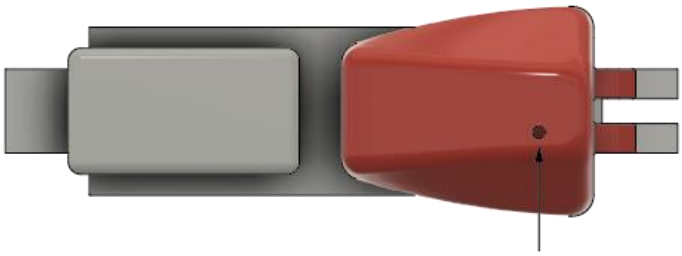

11) Smooth and paint

a) Once buoyancy is correct and all components are attached remove the sensor, VHF and GTR and smooth all remaining sharp edges
b) Sand all surfaces of the tag with 120 grit
c) Remove residues with rubbing alcohol and wipe clean
d) Cover inside surfaces with masking tape
e) Paint outside surfaces with neutral grey (or other paint that reduces fish interest and bites after release) and leave to dr y
f) Mask all outside surfaces except the exposed surfaces when floating
g) Paint with signal color to facilitate spotting tag at sea and leave to dry
h) Glue reflective tape to the very back of the base, that remains exposed when floating in the water
i) Write contact details on outside area of the tag
j) Cover all outside surfaces with a clear finish coat

Full Assembly and Testing

1) Full assembly (for field tests or deployments)

k) Insert sensor into sensor foam, if too loose add one layer of tape on the sensor side until fit is tight
l) Secure sensor with 3 mm zip tie or O-ring
m) Insert VHF into VHF foam and secure by inserting a 3 mm zip-tie through hole and closing it. Double-check that VHF cannot slide out.
n) Bend open both eyelet screws of GTR
o) Insert one side into GTR attachment point and bend it closed again
p) Insert an O-ring into the other one and bend the eyelet closed again
q) Double-check that release latch moves freely and that the release mechanism spring works
r) Arm the release by tensioning the O-ring over the mechanism and the latch
s) Close the tag around the fin

i) You should hear/feel the click of the release latch engaging with the release pin and the tag should be closed tightly around the fin

2) Testing

a) Re-test buoyancy with all components
b) Re-test release mechanism
   i) Assemble tag with short duration GTR
   ii) Clamp tag around vertical PVC sheet or similar to simulate the attachment on a dorsal fin
   iii) Leave in a saltwater tank
   iv) Time release and check VHF signal
c) Test VHF range

Customization Considerations:

- The base dimensions and thickness can be changed to accommodate different payloads or allow the deployment on sharks with different fin shapes and sizes
    - Wider bases provide more stability and space for payloads but are heavier requiring more floatation
    - Thicker bases are stiffer and potentially better for larger and wider fins
- Foam with higher pressure rating is denser, thus larger volumes are needed to ensure buoyancy. This can affect the size and hydrodynamics of the tag and impact the minimal study animal size. We recommend using the lowest pressure rating possible for the study area and species, especially for the VHF foam. Other components can be produced from denser foam to ensure component strength (i.e. release mechanism and GTR attachment point).